| REV | DATE | CONTENT |
|---|---|---|
| V0 | 20190611 | First release |

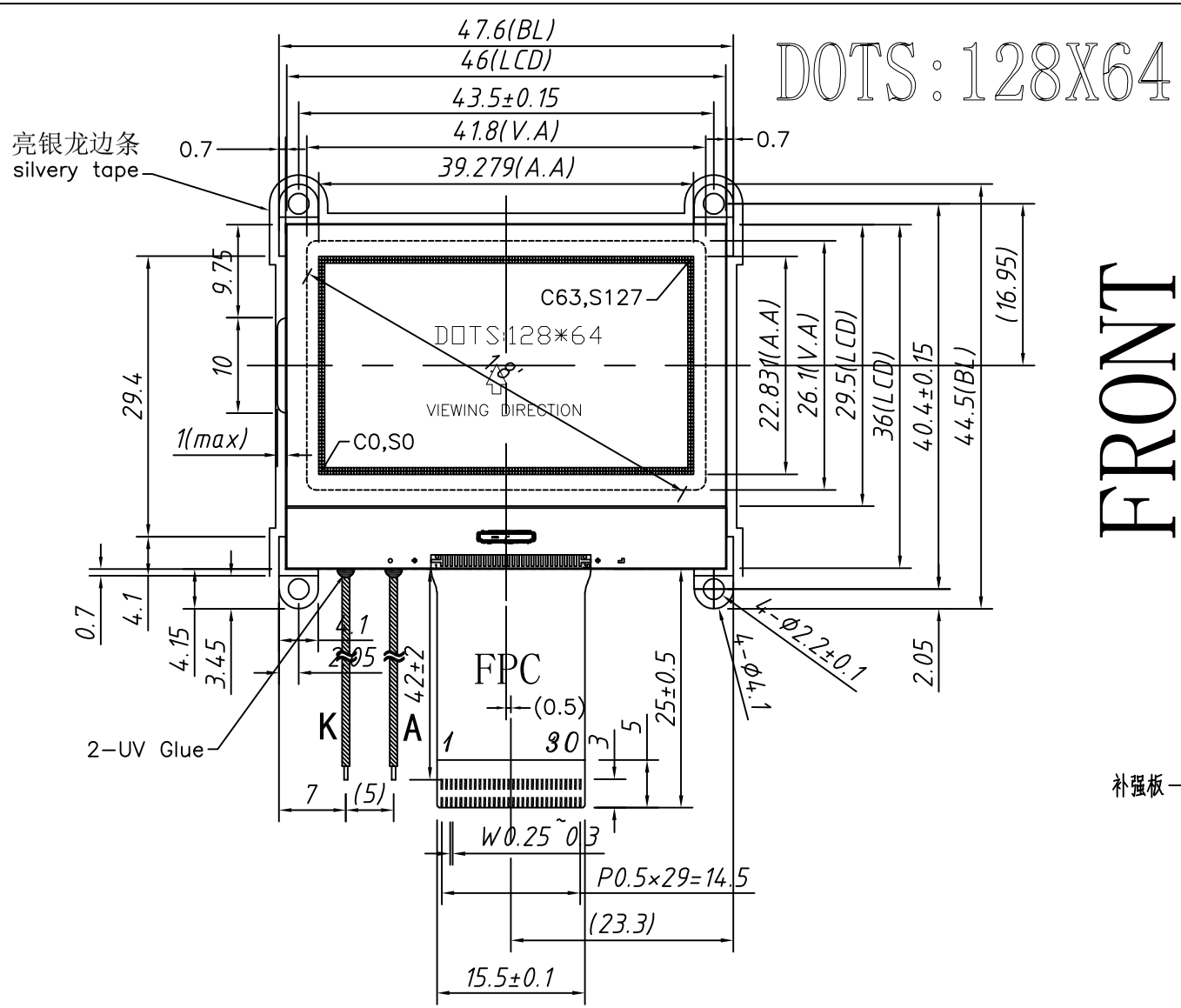


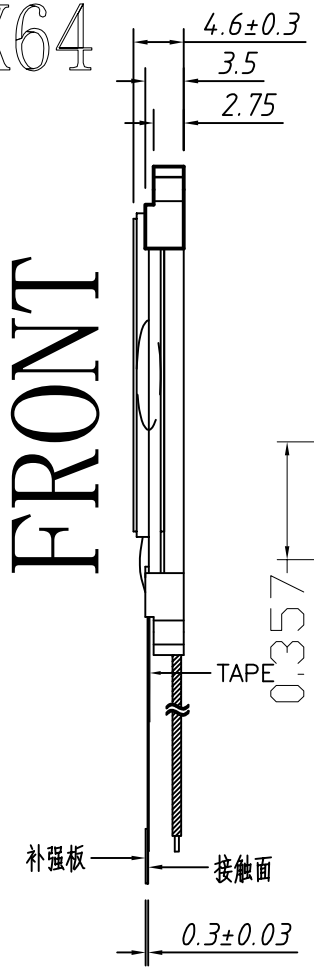


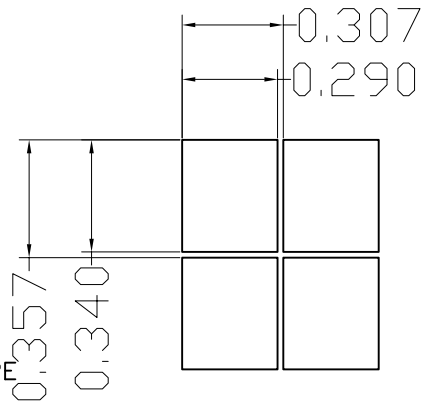


| | | |
|---|---|---|
| 1 | IRS | |
| 2 | PS | |
| 3 | C86 | |
| 4 | VR | |
| 5 | V0 | |
| 6 | V1 | |
| 7 | V2 | |
| 8 | V3 | |
| 9 | V4 | |
| 10 | CAP2− | |
| 11 | CAP2+ | |
| 12 | CAP1+ | |
| 13 | CAP1− | |
| 14 | CAP3+ | |
| 15 | VOUT | |
| 16 | VSS | |
| 17 | VDD | |
| 18 | D7 | |
| 19 | D6 | |
| 20 | D5 | |
| 21 | D4 | |
| 22 | D3 | |
| 23 | D2 | |
| 24 | D1 | |
| 25 | D0 | |
| 26 | /RD | |
| 27 | /WR | |
| 28 | A0 | |
| 29 | /RES | |
| 30 | /CS1 | |

| | | |
|---|---|---|
| 1 | Lcd Type | FSTN,Positive |
| 2 | Viewing Direction | 6 O'clock |
| 3 | Drive Method | 1/65D,1/9B |
| 4 | Polsrizer Mode | TRANSFLECTIVE |
| 5 | VDD/VOP | 3.3V/8.2V(REF) |
| 6 | Operating Temperature | -20°C ~70°C |
| 7 | Storage Temperature | -30°C ~80°C |
| 8 | IC | ST7565R/COG OR EQU |
| 9 | Backlight | White LED,Vf=3.0±0.2V(If=45mA) |
| 10 | Environmental requirements | ROHS compliance |

2. 电路图 CIRCUIT DIAGRAM 1*3=3 Dies

White LED,Vf=3.0±0.2V(If=45mA)

颜色 ：白

Color：White

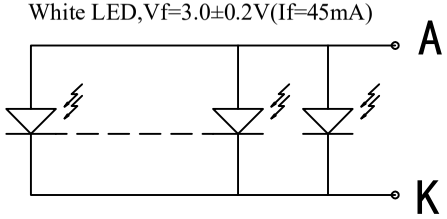


The non-specified tolerance of dimension is±0.3mm.

| | | | |
|---|---|---|---|
| SCALE: 1/1 | UNIT: mm | HZY Display CO., | |
| REV: V0 | PAGE: 1/1 | | |
| DRAW | XH | MODEL LCM DRAWING | |
| CHECK | | TITLE LCM DRAWING | |
| APPROVE | | DWG NO. H012864R4-WFH018-00 | |