ROSH

Reversion	Dispcription	Date	Signed
V0	First issue	25.05.19	Penglz

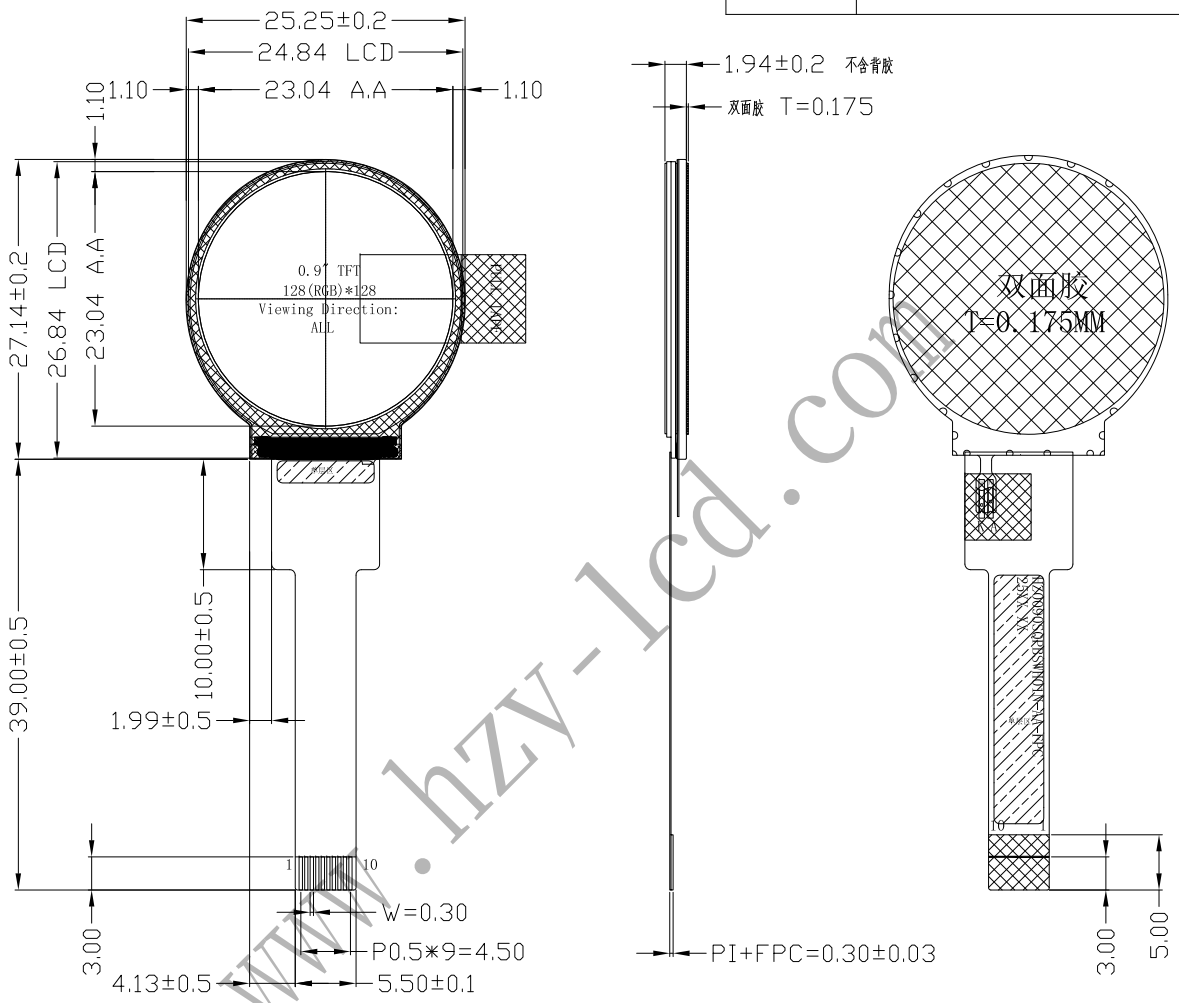

PIN	DESCRIPTION
1	GND
2	LEDK
3	VDD
4	RS
5	CS
6	SCL
7	SDA
8	RESET
9	LEDA
10	NC

4-SPI

NOTES:

1. DISPLAY TYPE:0.9″ TFT,TRANSMISSIVE
2. DRIVER IC:ST7735P3 or compatible
3. VIEWING DIRECTION: All
4. BACKLIGHT: 2 pcs White LED
5. BRIGHTNESS: 900 cd/m² (typ)
6. INPUT VOLTAGE: VCC 2.8V(typ)
7. OPERATING TEMP: -20° C~ +70° C
8. STORAGE TEMP: -30° C~ +80° C
9. UNDEFINED DIMENSION TOLERANCE: ±0.2mm
10. RoHS COMPLIABLY

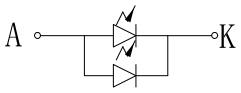

If=40mA ; Vf=3.0V

LED CIRCUIT DIAGRAM

深圳市华之洋光电科技有限公司

SHENZHEN HZY PHOTOELECTRIC TECHNOLOGY CO., LTD

Custumer Ref.	Model No.		Drawing Title	HZ0090SQPBSWH01N-AA			

Part No.	Approve		Material	Unmarked Tolerance	Unit	Scale	Page
---	Checked		LCM	±0.2	mm	--	1 of 1
Drawing No.							
---	Draw	Penglz	Date	2025.05.19	Rev 00		

www.hzy-lcd.com